DIJEFA: Dinasti International Journal of Economics, Finance & Accounting
E-ISSN: 2721-303X
P-ISSN: 2721-3021
https://dinastipub.org/DIJEFA dinasti.info@gmail.com +62 811 7404 455

DOI: https://doi.org/10.38035/dijefa.v6i6.5724
https://creativecommons.org/licenses/by/4.0/
Received: 11 October 2025 | **Revised:** 23 December 2025 | **Accepted:** 08 January 2026

Analysis of Occupational Safety and Health (K3) Competency of Outsourced Workers on Employee Performance: Implications for Occupational Accident Risk Control (Survey Study at PT PLN Nusantara Power Unit Generation in Central Kalimantan)

Anang Kurniawan[1*], H. Vip Paramarta[2], Sri Rochani Mulyani[3]
[1]Universitas Sangga Buana, Bandung, Indonesia, anangkurniawan@gmail.com
[2]Universitas Sangga Buana, Bandung, Indonesia, -
[3]Universitas Sangga Buana, Bandung, Indonesia, -

[*]Corresponding Author: anangkurniawan@gmail.com[1]

Abstract: This study aims to analyze the influence of Occupational Health and Safety (OHS) competence of outsourced workers on employee performance and its implications for occupational accident risk control. A quantitative approach was employed using a survey method conducted among outsourced workers at PT PLN Nusantara Power, Pulang Pisau Generation Unit. Questionnaires were used to gather data, which was then analysed using the SPSS technique. The results indicate that OHS competence has a significant positive effect on employee performance, and employee performance directly influences the effectiveness of occupational accident risk control. This research highlights the vital role of outsourced workers in supporting company operations, particularly in the electricity generation sector, which is characterized by a high-risk work environment. The findings contribute to emphasizing the importance of systematically and continuously improving OHS competence to enhance employee performance and create a safe and productive work environment. The novelty of this study lies in its specific examination of outsourced workers' OHS competence as both a direct and indirect predictor of employee performance and occupational accident risk control within a high-risk electricity generation context.

Keywords: OHS Competence, Outsourced Workers, Employee Performance, Occupational Accident Risk.

INTRODUCTION

Occupational safety and health (K3) is an important element in the energy industry, especially in the electricity sector such as PT PLN Nusantara Power Pulang Pisau Generation Unit. This company utilizes outsourced labor as part of its efficiency strategy, but this condition poses challenges related to worker competence in the implementation of K3. Outsourced workers often have more limited knowledge and experience than permanent workers, so the potential risk of work accidents increases if not accompanied by adequate coaching. The K3

Management System, as outlined in Government Regulation of the Republic of Indonesia Number 50 of 2012, and the outsourcing regulations outlined in Law Number 6 of 2023, are binding on this organisation from a regulatory standpoint. This strengthens the urgency of supervision and improving worker competence in the framework of occupational safety.

K3 culture is understood as a set of shared values and norms that create a safe work environment. Mangkunegara (2005) stated that K3 culture is the value and belief of the organization in maintaining work safety, while Sutrisno (2010) emphasized the role of this culture in preventing accidents and occupational diseases through a risk management system that is understood by all workers. This view shows that competence is an important factor in ensuring safety in the workplace. At the national level, employment data shows that the majority of work accident cases occur in the wage receiving sector, while a small percentage come from workers in other sectors (Ministry of Agriculture, 2024). In addition, work accidents in various industrial sectors have increased in recent years, including in the energy sector, which shows the need to increase awareness and competence of K3.

As an electricity provider company, PT PLN Nusantara Power Pulang Pisau Generation Unit demands the optimal performance of all workers involved in its operations. The company implements an outsourcing strategy by involving various service providers who are tasked with providing workers with certain skills. These outsourced workers are not direct employees of service user companies, but are bound by a legal contract through a labor provider. This condition requires uniformity of competency standards, because differences in educational backgrounds and work experience can affect workers' readiness to understand and implement K3 procedures.

In terms of educational backgrounds, most of the outsourced workforce comes from the middle level, indicating the need for further coaching so that workers understand work risks and control strategies. K3 performance measurement is carried out through work accident reports, compliance with K3, and K3 management assessments. In a certain period, the company's operations show that there are no accidents or work-related diseases, which indicates that there is a fairly good implementation of K3. In addition to the results, K3 performance is also assessed from the management implementation process and periodic evaluation through self-assessment and central assessment of the company. Performance goals are set at the beginning of the year and are aligned from the management level to the outsourced workforce.

Employee performance assessments are carried out periodically and describe the status of K3 risk control. Several indicators show good achievements in various aspects, such as zero accidents and regulatory compliance. However, these achievements need to be maintained through strengthening the competence of workers, especially in terms of knowledge, skills, and work attitudes. Previous research by Ramli (2022), Suwandy (2020) and Grisma & Nugraheni (2023) shows that good workforce competence has an impact on improving K3 performance as well as reducing accident incidence. Competencies that include understanding procedures, technical skills, and safety awareness are proven to drive compliance and reduce occupational risks. On the contrary, Syukri (2017) stated that low competence increases the potential for work accidents, especially in high-risk sectors such as electricity. Work accident data within PLN shows that there are fatalities among outsourced workers, with most incidents occurring due to electric shock and activities outside working hours (Magazine, 2022; Perdjoeangan, 2022). This corroborates that inadequate competence greatly affects the increased risk of accidents.

Based on these conditions, this study focuses on exploring the competency aspects that have the most influence on employee performance and its implications on the risk control of work accidents at PT PLN Nusantara Power Pulang Pisau Generation Unit.

This study aims to descriptively understand how K3 competencies, employee performance, and risk control are applied by outsourced personnel in the company's environment. Furthermore, this research examines the following: how K3 competencies affect employee performance, how performance relates to work risk control, and how competence affects risk control both directly and indirectly via performance as an intermediary variable. Through this research, it is hoped that a comprehensive understanding of the relationship between competence and risk control in the perspective of human resource management will be obtained, as well as to make a scientific and practical contribution to workforce management in the energy sector. The researcher hopes that the results of this study will be a reference in the formulation of competency development strategies and strengthening K3 culture which has an impact on reducing work accidents and improving organizational performance in a sustainable manner within Sangga Buana YPKP University Bandung and the industrial world.

Management and Organizational Theory, management is understood as an art as well as a science in managing an organization through the process of planning, organizing, mobilizing, and supervising to achieve goals that have been set together. Etymologically, management is interpreted as an effort to carry out and manage various activities involving a group of people with agreed goals. In an organizational context, management includes a series of collective efforts to make optimal use of resources to achieve desired results. The art and science of managing the process of successfully using human resources and other resources to reach particular objectives is defined by Hasibuan (2017, p. 41). That being said, according to Edison (2016, p. 57), management is all about figuring out what the organisation needs, how to get it, and then keeping everyone on the same page to make sure it gets there. Thus, management is an important function in ensuring that the organization runs according to the direction that has been set through integrated and systematic management of resources.

Human Resource Management Theory, Human resource management, or HRM, is a subfield of management concerned with creating and maintaining productive work environments via the strategic use of human resources. Hasibuan (2005) stated that management is a science and art in managing human resources and other resources optimally, so management's task is to organize organizational elements to support each other in achieving goals. The development of management concepts shows a shift from a mechanistic approach to attention to the human aspect through the flow of human relations, which is then refined by the modern management school by including psychological studies to maximize the role of humans in the organization (T. Hani Handoko, 2001). Febrian (2022) defines human resources as an integrated ability between the individual's mental and physical powers, while Ende (2023) explains human resource management as a science and art in managing relationships and the role of the workforce to provide benefits for companies, employees, and society. Thus, human resource management not only manages the workforce as an organizational asset, but also creates harmonious and productive relationships to support mutual success.

The Theory of Occupational Safety and Health (K3) Competency includes the ability of individuals to carry out work correctly and safely based on elements of knowledge, skills, and attitudes. Sutrisno (2019) stated that competence is a combination of these three aspects that affect a person's work success, while Mangkunegara (2005) added that competence also includes experience, abilities, and behavior. In the context of K3, competence is an important foundation to prevent accidents and occupational diseases. Government Regulation Number 50 of 2012 defines K3 as all activities that aim to protect the workforce through risk prevention efforts. The Decree of the Minister of Manpower No. Kep. 463/MEN/1993 emphasizes that K3 is a protection for all parties in the work environment to remain safe, healthy, and productive. Law Number 1 of 1970 article 12 requires companies to provide protection through the provision of hazard information, the provision and application of personal protective equipment, and an explanation of safe work behavior (PLN, 2023). Thus, K3 competence is

not only related to individual abilities, but also part of the institution's obligation to create a safe and healthy work environment.

Outsourcing or *outsourcing* theory is workers who are provided by a third party to carry out tasks in a company without having the status of permanent employees where they work. Rajagukguk et al., (2023) explained that this employment relationship is contractual, but the contract is stipulated by the labor provider company, not by the service user company. This system is generally applied for cost efficiency and labor flexibility. Etymologically, outsourcing means outsourcing or *contracting out*, which is the transfer of part of a company's operations to another party so that the company can focus on core activities or reduce operational costs. The legal basis is reflected in Article 1601 of the Civil Code regarding work wholesale agreements, which are agreements where the contractor carries out certain work for other parties for certain remuneration (Fauzi, 2006). Thus, outsourced personnel is a form of work arrangement that transfers certain functions or jobs to service provider companies to support the organization's operational needs more flexibly.

Work Accident Risk Control Theory is an unforeseen event that has adverse impacts, both in terms of physical, material, and time, and can range from minor injury to permanent disability or death. Austen & N., (1991) explained that work accidents occur without an element of intentionality or planning, so they are unpredictable and difficult to predict. Every accident incident always brings consequences, both for workers and the company. For workers, accidents can cause physical loss and suffering, while for companies they can hinder the production process, disrupt operational efficiency, and cause cost and time losses. Thus, the risk control of work accidents is an important aspect in creating a safe work environment and maintaining the continuity of the company's operations.

Employee Performance Theory is the result of work achieved by individuals in carrying out their duties and responsibilities based on predetermined standards, and is often associated with the effectiveness, efficiency, and productivity of the organization. Mangkunegara (2005) defines it as the achievement of the quality and quantity of work according to the responsibilities given, while Suryani (2024) emphasizes that performance is the result of a series of activities to achieve certain goals, which in the context of the organization is the fruit of cooperation between members. Rivai (2018) added that performance is reflected in the real behavior of individuals in carrying out their roles and responsibilities. Thus, employee performance includes aspects of results, processes, and behaviors that together support the achievement of organizational goals.

Empirical studies show that various previous studies have consistently confirmed the relationship between competence, occupational safety and health (K3), as well as employee performance in various sectors. Most studies, such as those conducted by Ariko, (2019), Ibrahim & Irbayuni, (2022), Qurbani D, (2018) and Chotimah (2018), conclude that the application of K3 and competence has a positive effect on employee performance. Several studies have also highlighted the role of work discipline, commitment, and safety culture in strengthening the implementation of K3 and improving performance (Amelia et al., 2021; Christina et al., 2012). On the other hand, studies such as Safitri et al., (2024) and Wahyono (2015) emphasize the importance of risk control and internal management in maintaining operational sustainability and organizational performance. International research by Haddad (2017) also shows that behavioral, functional, and managerial competencies contribute positively to employee performance. Although key variables such as competence, K3, and performance have been common similarities in previous studies, most have not specifically highlighted outsourced workers as a research subject, thus making room for more contextual follow-up studies of outsourced workers.

METHODS

This research examines the impact of K3 abilities on employee performance and its implications for risk management of work accidents using a quantitative approach using descriptive and verifiable methodologies. There are two types of data utilised: primary and secondary. Primary data was collected by surveying employees of PT PLN Nusantara Power Pulang Pisau Generation Unit Pulang Pisau who were outsourced, while secondary data was culled from official corporate records, performance reviews, and safety rules and regulations. The goal of using this method was to get a quantifiable and objective image of the connection between the study variables.

The population in this study is all outsourced workers who work at PT PLN Nusantara Power Unit Pulang Pisau Generation. The determination of the number of samples was carried out using the probability sampling technique using the *proportionate stratified random sampling* approach so that the representatives of each entity of the outsourcing company providing power remained proportional. The research variables consisted of K3 competence as an independent variable, employee performance as an intervening variable, and work accident risk control as a dependent variable. Each variable is operationalized through relevant indicators, such as knowledge, skills, and attitudes for competence; productivity, quality of work, and responsibility for performance; as well as prevention, mitigation, and compliance with K3 for risk control.

A questionnaire using a Likert scale organised according to variable indicators was used to gather data. Furthermore, paperwork is used to bolster facts pertaining to the workforce, organisational structure, and K3 policies of the corporation. Prior to further investigation, data processing processes include coding, tabulation, and verification. Validity and reliability tests were conducted on the instrument to guarantee high-quality results. In order to make sure that people are answering questions consistently, reliability tests employ Cronbach's Alpha coefficient, while validity tests check whether a question item is accurate.

Analyses were conducted by means of descriptive and verifiable statistics. A descriptive statistics analysis is conducted to elucidate the characteristics of the respondents as well as the patterns detected in their responses to each variable. Using a conventional assumption test, which includes checks for heteroscedasticity, multicollinearity, and normalcy, a verifiable analysis was conducted to guarantee that the regression model was feasible. In addition, factors' direct and indirect influences were measured by multiple linear regression analysis, which was used for hypothesis testing. The investigation is anticipated to provide evidence-based findings about how K3 skills affect employee performance and how this, in turn, affects the risk of work accidents at PT PLN Nusantara Power Pulang Pisau Generation Unit.

RESULTS AND DISCUSSION

Result

Data Quality Test Results

Table 1. Results of Variable X Validity Test

Statement (X)	r Count	r Table	Information
X1	0,754	0,1404	Valid
X2	0,724	0,1404	Valid
X3	0,803	0,1404	Valid
X4	0,684	0,1404	Valid
X5	0,797	0,1404	Valid
X6	0,627	0,1404	Valid
X7	0,775	0,1404	Valid
X8	0,743	0,1404	Valid

Statement (X)	r Count	r Table	Information
X9	0,720	0,1404	Valid
X10	0,716	0,1404	Valid

Based on Table 1, it is known that all correlation values of each statement that form variable X state that according to the criteria r calculate > r table so that all variable statements in this study are declared valid.

Table 2. Results of the Y-Variable Validity Test

Statement (Y)	r Count	r Table	Information
Y11	0,738	0,1404	Valid
Y12	0,866	0,1404	Valid
Y13	0,830	0,1404	Valid
Y14	0,775	0,1404	Valid
Y15	0,844	0,1404	Valid
Y16	0,764	0,1404	Valid
Y17	0,792	0,1404	Valid
Y18	0,756	0,1404	Valid
Y19	0,813	0,1404	Valid
Y20	0,621	0,1404	Valid

Based on Table 2, it is known that all correlation values of each statement that forms variable Y are stated that according to the calculation criteria of the rtable > so that all variable statements in this study are declared valid.

Table 3. Results of the Z Variable Validity Test

Statement (Z)	r Count	r Table	Information
Z21	0,863	0,1404	Valid
Z22	0,802	0,1404	Valid
Z23	0,810	0,1404	Valid
Z24	0,833	0,1404	Valid
Z25	0,807	0,1404	Valid
Z26	0,845	0,1404	Valid

Based on Table 3, it is known that all correlation values of each statement that form variable Z state that according to the rcalculate criteria > rtable so that all variable statements in this study are declared valid.

Table 4. Reliability Test Results

Variabel	Cronbach's Alpha Item	Cronbach's Alpha Item	Information
Variabel X	0,901	0,600	Reliabel
Variabel Y	0,918	0,600	Reliabel
Variabel Z	0,906	0,600	Reliabel

Based on Table 4, the Cronbach's Alpha value for the competency variable of outsourced personnel (X) was 0.901, employee performance (Y) was 0.918, and work accident risk control (Z) was 0.906, all of which were greater than the minimum limit of 0.600. This shows that all variables in the study are declared reliable, so that the indicators used can be trusted as a

measuring tool and the research can be continued because it meets the criteria of validity and reliability.

Statistical Test Results

Table 5. Normality Test Results
One-Sample Kolmogorov-Smirnov Test

		Unstandardized Residual
N		195
Normal Parameters[a,b]	Mean	.0000000
	Std. Deviation	.07308534
Most Extreme Differences	Absolute	.084
	Positive	.084
	Negative	-.082
Kolmogorov-Smirnov Z		1.174
Asymp. Sig. (2-tailed)		.127

a. Test distribution is Normal.
b. Calculated from data.

According to the normalcy test findings shown in the table above, a *two-tailed* statistical significance level of 0.127 was reached. The findings show that all variables have a significant value larger than 0.05, indicating that the data follows a normal distribution.

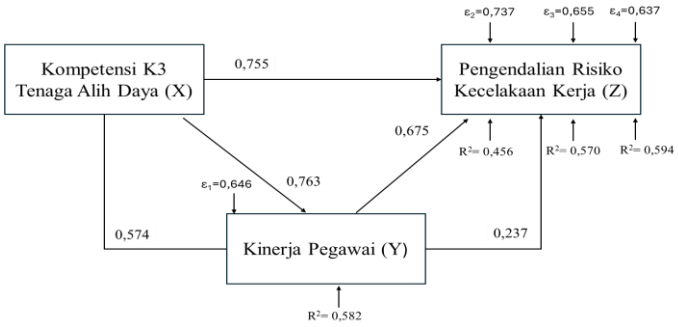

Figure 1. Path Analysis Diagram Model

Information:

ρYyx = The coefficient of the X Variable (Outsourced Workforce K3 Competence) to Variable Y (Employee Performance).

ρZzy = The coefficient of the Y Variable (Employee Performance) to Z Variable (Work Accident Risk Control).

ρZzx = The coefficient of the X Variable (Outsourced Labor K3 Competence) to Z Variable (Work Accident Risk Control)

ρZxyz = The coefficient of the X Variable (Outsourced Personnel K3 Competence) to Z Variable (Work Accident Risk Control) through the Y variable (Employee Performance)

R = Correlation Coefficient between Competency Variables and Work Accident Risk Control on Employee Performance.

E = Residual factor

Sub-Structure Analysis I: The Influence of K3 Competencies of Outsourced Workers on Employee Performance

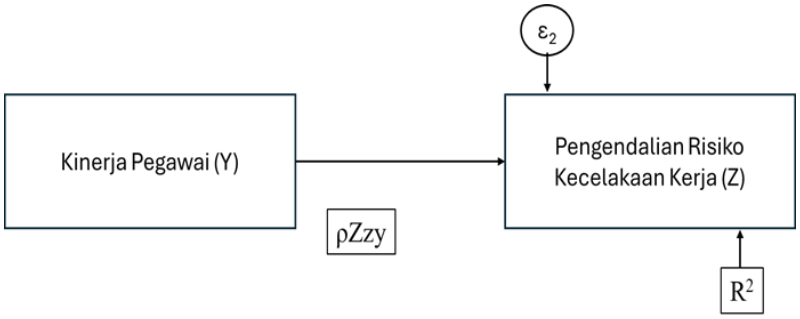

Figure 2. Sub Path 1 Diagram of Variable X to Y

Based on Figure 2, the researcher made the following structural equations:
The linear equation of sub-structure 1 is:
$Y = \rho yx + \varepsilon 1$
$Y = 0{,}763X + \varepsilon 1$

Table 6. Substructure Path Determination Coefficient 1
Model Summary

Model	R	R Square	Adjusted R Square	Std. Error of the Estimate
1	.763[a]	.582	.580	3.119

a. Predictors: (Constant), Kompetensi K3 Tenaga Alih Daya

Results from table 6 show that outsourced workers' K3 competency had a determinant coefficient (R^2) of 0.582 (58.2%), and that the external variable affecting the performance of non-model employees was 0.428 (42.8%).

Table 7. The Effect of Outsourced Workers' K3 Competency on Employee Performance

Variable	Path Coefficient	Magnitude of Influence
Outsourced K3 Competencies	0,763	0.582

Table 7 shows that the competence of outsourced K3 workers has a 0.763 value for the coefficient of the effect route on employee performance, with a magnitude of 0.582.

Sub-Structure Path Analysis II: The Effect of Employee Performance on Work Accident Risk Control

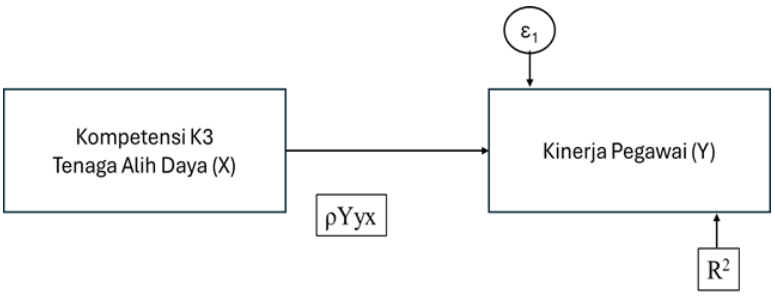

Figure 3. Variable path diagram Y Against Z

$Z = \rho Zzy + \varepsilon 2$
The equation of substructure II is as follows:

$Z = \rho zyY + \varepsilon 2 = 0{,}675\ Y + \varepsilon 2$

Table 8. The Effect of Employee Performance on Work Accident Risk Control

Model Summary

Model	R	R Square	Adjusted R Square	Std. Error of the Estimate
1	.675[a]	.456	.453	3.559

a. Predictors: (Constant), Pengendalian Risiko Kecelakaan Kerja

From table 8, it is explained that the value of the determinant coefficient (R^2) of K3 competence of outsourced workers is 0.456 (45.6%) and the magnitude of the epsilon value or external variables that affect employee performance that is not used as a model in this study, is 0.644 (64.4%).

Table 9. The Effect of Employee Performance on Work Accident Risk Control

Variable	Path coefficient	Magnitude of Influence
Employee Performance	0,675	0.456

From table 9 above, it can be explained that the value of the coefficient of the influence path of employee performance on the control of the risk of work accidents is 0.675 and the magnitude of influence is 0.456.

Sub-Structure Path Analysis III: The Effect of K3 Competency of Outsourced Workers on Work Accident Risk Control

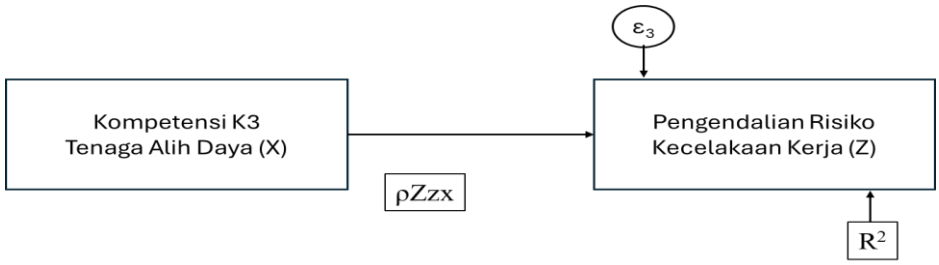

Figure 4. Variable path diagram X against Z

The equation of substructure III is as follows:

$Z = pZzx + \varepsilon 3$

$= 0{,}755X1 + \varepsilon 3$

Table 10. Coefficient of Determination of Sub-Structure Pathway III

Model Summary[b]

Model	R	R Square	Adjusted R Square	Std. Error of the Estimate
1	.755[a]	.570	.568	2.175

a. Predictors: (Constant), Kompetensi K3 Tenaga Alih Daya

b. Dependent Variable: Pengendalian Risiko Kecelakaan Kerja

Table 10 shows that outsourced workers' K3 competency has a determinant coefficient (R^2) of 0.570 (57.0%), and that the epsilon value, which represents external factors influencing the performance of employees not included in the model, is 0.430 (43.0%).

Table 11. The Effect of K3 Competency of Migrant Workers on Work Accident Risk Control

Variable	Path coefficient	Magnitude of Influence
Outsourced Workforce K3 Competencies	0,570	0.324

From table 11 above, it can be explained that the value of the coefficient of the influence path of the competence of K3 outsourced workers on the control of the risk of work accidents is 0.570 and the magnitude of influence is 0.324.

Sub-Structure Path Analysis IV: The Indirect Influence of K3 Competence of Outsourced Workers on Work Accident Risk Control Through Employee Performance

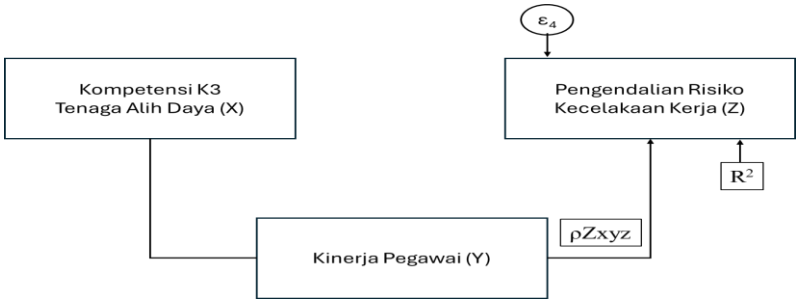

Figure 5. Diagram of the Indirect Influence of Variable X on Z through Variable Y

The equation of sub-structure IV is as follows:
$Z = \rho Yyx + pZzy + \varepsilon 4$

Table 12. The Indirect Influence of K3 Competence of Power Experts on Work Risk Control through Employee Performance

Variable	Path Coefficients X -Y	Path Coefficients Y-Z	Indirect Influence of X Against Z Through Y
K3 Competence of Outsourced Personnel (X) on Employee Performance (Z) Through Employee Performance (Y)	0,574	0,237	0,575 x 0,224= 0,1360 (13,60%)

From table 12 above, it can be explained that:

1. The value of the indirect influence path coefficient of K3 competencies of outsourced workers (X) and employee performance (Y) is 0.574.
2. The value of the employee performance path coefficient (Y) towards work risk control (Z) is 0.237.
3. The value of the indirect influence of the K3 Competency of outsourced workers (X) on work risk control (Z) through employee performance (Y) was 0.1360 (13.60%).
4. To determine the ability of employee performance variables to mediate the competency variable of K3 outsourced workers to the variable of occupational risk control, it can be seen from table 13:

Table 13. Direct Influence and Indirect Influence

Variable	Path Coefficients	Influence	
		Immediately	Indirect
K3 Competencies of Outsourced Workers on Employee Performance	0,574	0,574 x 0,574 = 0,329	-
Employee Performance on Work Risk Control	0,237	0,237 x 0,237 = 0,056 **(5,6%)**	-
K3 Competence of Outsourced Workers to Work Risk Control through Employee Performance	-	-	0,575 x 0,237 = 0,1360 **(13,60%)**

The explanation from table 13, where the amount of indirect influence is greater than the direct influence or 13.60% > 5%, meaning that employee performance (Y) as an intervening variable is able to mediate or corroborate between independent variables and dependent variables.

Hypothesis Test Results

Partially (t-test) and concurrently (F-test) testing will be conducted in this research according to the following criteria:

1. If the p-value > 0.05 or if t counts < t table, then H0 is accepted.
2. If p-value < 0.05 or if t counts > t table then H0 is rejected.

Table 14. The Influence of K3 Competence of Power Experts on Employee Performance

Coefficients[a]

Model		Unstandardized Coefficients		Standardized Coefficients	t	Sig.
		B	Std. Error	Beta		
1	(Constant)	10.208	2.063		4.947	.000
	Kompetensi K3 Tenaga Alih Daya	.769	.047	.763	16.405	.000

a. Dependent Variable: Kinerja Pegawai

Table 14 shows that the competence of K3's contracted workers has a major effect on productivity in the house. Based on the route coefficient being 0.763 and the t-count being 16.405 > t-table 1.972 (p-value 0.000 < 0.05), we may conclude that H0 is rejected and Ha is accepted. By multiplying 0.763 by 2.763, we find that competency has a direct influence on employee performance to the tune of 0.5821. Therefore, it can be concluded that the direct influence of K3 Competencies of Outsourced Workers on Employee Performance is 0.5821.

Table 15. The Effect of Employee Performance on Work Accident Risk Control

Coefficients[a]

Model		Unstandardized Coefficients		Standardized Coefficients	t	Sig.
		B	Std. Error	Beta		
1	(Constant)	4.819	1.610		2.993	.003
	Kinerja Pegawai	.464	.036	.675	12.726	.000

a. Dependent Variable: Pengendalian Risiko Kecelakaan Kerja

Table 15 demonstrates that the risk control of work accidents is significantly influenced by employee performance, with a path coefficient of 0.675 and a t-count of 12.726 > t-table 1.972 (p-value 0.000 < 0.05). Consequently, we reject H0 and embrace Ha. You may calculate the direct influence's magnitude as 0.4556 by multiplying 0.675 by 0.675. It follows that the control of the risk of work accidents is directly affected by employee performance, with a value of 0.4556.

Table 16. The Direct Influence of K3 Competence of Power Experts on Work Accident Risk Control

Coefficients[a]

Model		Unstandardized Coefficients		Standardized Coefficients	t	Sig.
		B	Std. Error	Beta		
1	(Constant)	2.288	1.439		1.590	.113
	Kompetensi K3 Tenaga Alih Daya	.523	.033	.755	16.011	.000

a. Dependent Variable: Pengendalian Risiko Kecelakaan Kerja

According to Table 16, there is a strong positive correlation between the competence of K3 outsourced workers and the reduction of work accident risks. This correlation is supported by a path coefficient of 0.755, a t-count of 16.011 > t-table 1.972 (p-value 0.000 < 0.05), and the affirmation of Ha rather than H0. The direct effect was 0.755 times 0.755, which is equal to 0.5700 in magnitude. It follows that the K3 competency of outsourced workers has a direct impact of 0.5700 on the management of the risk of workplace accidents.

Table 17. Indirect Influence of K3 Competence of Power Experts on Work Accident Risk Control through Employee Performance

Coefficients[a]

Model		Unstandardized Coefficients		Standardized Coefficients	t	Sig.
		B	Std. Error	Beta		
1	(Constant)	.623	1.489		.419	.676
	Kompetensi K3 Tenaga Kerja Alih Daya	.398	.049	.574	8.071	.000
	Kinerja Pegawai	.163	.049	.237	3.334	.001

a. Dependent Variable: Pengendalian Risiko Kecelakaan Kerja

Table 17 shows that the K3 competence of outsourced workers (0.574) and employee performance (0.237) had a significant positive effect on the risk control of work accidents, with t-count of 8.071 and 3.196 respectively > t-table 1.972 and p-value < 0.05. This proves the indirect influence of competence on risk control through employee performance, with an effect of 0.574 × 0.237 = 0.1360.

Table 18. Simultaneous Test Results (F Test)

ANOVA[a]

Model		Sum of Squares	Df	Mean Square	F	Sig.
1	Regression	1262.810	2	631.405	140.447	.000[b]
	Residual	863.170	192	4.496		
	Total	2125.979	194			

a. Dependent Variable: Pengendalian Risiko Kecelakaan Kerja
b. Predictors: (Constant), Kinerja Pegawai, Kompetensi K3 Tenaga Alih Daya

The Ftable value, which is 3.050, is determined by the following equations: n = 195, k = 2, α = 5% or 0.05, df = n-k-1 = 195-2-1 = 192. Additionally, the number of variables is 2. Hence, Ha is approved and Ho is denied since the F Test verifies that Fcount 140.447 exceeds Ftable 3.050 with a significance of 0.000 < 0.05. This indicates that there is a concomitant and substantial relationship between the competence of K3's outsourced workers (X) and the control of work-related accidents (Z) and employee performance (Y).

Table 19. Determination Coefficient Test Results (R^2)

Koefisien Determinasi (R2)

Model	R	R Square	Adjusted R Square	Std. Error of the Estimate
1	.771[a]	.594	.590	2.12030

a. Predictors: (Constant), Pengendalian Risiko Kecelakaan Kerja, Kompetensi Tenaga Alih Daya
b. Dependent Variable: Kinerja Pegawai

Table 19. shows an Adjusted R Square value of 0.590, meaning that work accident risk control and outsourced workforce competency contribute 59.0% to employee performance, while 41.0% is influenced by other factors.

The conclusion of the hypothesis test results stated:

H1 : There is a direct influence of the competence of outsourced K3 workers on employee performance **(accepted)**

H2 : There is a direct influence of employee performance on the risk control of work accidents **(accepted)**

H3 : There is a Direct Influence of Outsourced Workers' K3 Competence on Work Accident Risk Control **(Accepted)**

H4 : There is an Indirect Influence of Outsourced Workers' K3 Competence on Work Accident Risk Control Through Employee Performance **(Accepted)**

Discussion

The Direct Influence of Outsourced Workers' K3 Competencies on Employee Performance

This study's findings suggest that the competency of K3's outsourced workers significantly and positively affects employee performance, as the hypothesis was accepted based on the results of the hypothesis testing. These findings are consistent with obtaining significant values below 0.000 < 0.05 and are supported by t-calculation values that are greater than the t-table (16.405 > 1.972). The coefficient of direct effect is 0.5821.

The findings of Haqiqi's (2022) study, which found that competence significantly affects job performance, are consistent with these findings. This agrees with what Ibrahim & Irbayuni

(2022), discovered; in particular, that the greater the extent to which K3 (occupational safety and health) is implemented, the better the performance of the workers.

The Direct Influence of Employee Performance on Work Accident Risk Control

The second hypothesis's statistical testing findings were likewise supported by the predicate, demonstrating that the control of work accident risk is directly and significantly impacted by employee performance. These findings are consistent with obtaining significant values below 0.000 < 0.05 and are supported by t-calculation values that are greater than the t-table (12.726 > 1.972). The value of the direct influence coefficient is 0.4560.

This statement is in line with and supported by the theory from Sutrisno (2014) which explains that good performance reflects a positive attitude towards work that has implications for work safety.

The Direct Influence of Outsourced Workers' K3 Competencies on Work Accident Risk Control

The results of statistical testing on the third hypothesis also obtained an accepted predicate, which shows that the competence of K3 outsourced workers has a direct effect on the control of the risk of work accidents. This is evidenced by the results of the t-calculation value that is greater than the t-table (16.011 > 1.972) and the result is in line with the acquisition of significance values below 0.000 < 0.05. The value of the direct influence coefficient is 0.5700.

This statement is in line with the statement made by Zwell (2010), that work competencies include technical skills, motivation, and risk awareness, which are the foundation for the implementation of effective risk control.

Indirect Influence of Outsourced K3 Competencies on Risk Control Through Employee Performance

Through the use of mediation factors, namely employee performance, the findings of statistical testing of the fourth hypothesis demonstrated that K3 competency indirectly influences risk control. This predicate was accepted. Coefficient testing confirmed this, yielding an indirect impact value of 0.1360. The K3 competency variable of outsourced labor also showed a positive influence, with t-calculation values greater than the t-table (8,071 > 1,972) and the occupational accident risk control variable having a t-count value of 3,334 (t-calculation > t-table, 3,334 > 1,972). For the K3 competence variable of outsourced labor, the p-value (sig) value is 0.000 < 0.05, whereas for the variable of work accident risk control, it is 0.001 < 0.05.

This statement is in line with the findings of Fitriani, A., & Gunawan (2020) who stated that risk control is influenced by competence and performance simultaneously.

CONCLUSION

Findings from hypothesis testing and path analysis conducted on primary and secondary data pertaining to PT PLN Nusantara Power Pulang Pisan Generation Unit's staff indicate that the outsourced workers' K3 competency is of a very good standard and positively impacts staff performance. It has been shown that the competency of K3 has a direct impact on the control of work accident risks, and that employee performance plays a vital part in this process. In addition to direct influence, K3 competence has an indirect influence through employee performance as a mediation variable. Overall, these findings confirm that improving K3 competence is an effective strategy in reducing the risk of work accidents through optimizing employee performance.

REFERENCES

Amelia, N. P., Syukur, M. A. B., & Afandi, D. R. (2021). Pengaruh Komitmen, Disiplin Kerja dan Kompetensi Terhadap Pelaksanaan K3. *Jurnal Pengembangan Wiraswasta*, *23*(3), 203–212.

Ariko, M. F. (2019). Pengaruh Disiplin Kerja, Kompetensi, Serta Keselamatan Dan Kesehatan Kerja Terhadap Kinerja Karyawan PT. Sucofindo (Persero) Cabang Palembang. *Jurnal Ilmu Manajemen*, *8*(1), 73–84.

Austen, D. A., & N., R. H. (1991). *Manajemen Proyek Konstruksi*. PPM.

Chotimah, C. (2018). Pengaruh Kompetensi Dan K3 (Keselamatan Dan Kesehatan Kerja) Terhadap Kinerja Karyawan Pada Pt. Lotus Indah Textile Industries Bagian Winding Di Nganjuk. *Jurnal Ilmu Manajemen*, *6*(3), 118–125.

Christina, W. Y., Djakfar, L., & Thoyib, A. (2012). *Pengaruh Budaya Keselamatan dan Kesehatan Kerja (K3) terhadap kinerja proyek konstruksi. Syukri*. Salemba Empat.

Edison, E. dkk. (2016). *Manajemen Sumber Daya Manusia*. Alfabeta.

Ende. (2023). *Manajemen sumber daya manusia*. Eureka Media Aksara.

Fauzi, M. (2006). Aspek Hukum Penyerahan Sebagian Pelaksanaan Pekerjaan Kepada Perusahaan Lain (outsourcing). *Risalah Hukum Fakultas Hukum Unmul*, *2*, 87.

Febrian, W. D. (2022). Mengenal Manajemen Sumber Daya Manusia. *Purbalingga: CV. Eureka Media Aksara*.

Grisma, I., & Nugraheni, R. (2023). Pengaruh K3 terhadap kinerja tenaga kerja alih daya. *Jurnal Ilmu Ekonomi (IPB Journal).*, *14*(1), 45–53.

Haddad, H. (2017). Impact of human competencies on caritas Jordan employees performance. *Journal of Resources Development and Management*, *1*(28), 57–71.

Hasibuan, M. S. (2017). *Manajemen Sumbe Daya Manusia*. PT Bumi Aksara.

Ibrahim, N. N., & Irbayuni, S. (2022). Pengaruh K3 (Keselamatan Dan Kesehatan Kerja) Dan Kompetensi Sumber Daya Manusia Terhadap Kinerja Karyawan Pada Pt. Bambang Djaja. *Scientific Journal Of Reflection: Economic, Accounting, Management And Business*, *5*(4), 997–1005.

Kemnaker. (2024). *Data Kecelakaan Kerja Ketenagakerjaan SDI Tahun 2023*. https://satudata.kemnaker.go.id/data/kumpulan-data/1728

Magazine, I. (2022). *14 Pekerja Tewas dari 29 Kecelakaan Kerja di PLN Sepanjang 2022*. https://isafetymagazine.com/14-pekerja-tewas-dari-29-kecelakaan-kerja-di-pln-sepanjang-2022/

Mangkunegara, A. P. (2005). Manajemen Sumber Daya Manusia Perusahaan. Bandung: PT. Remaja Rosdakarya. Qurbani D. *S. U*, *1*, 110–129.

Perdjoeangan, K. (2022). *Catatan K3 di PLN 2022, 14 Pekerja Tewas dari 30 Kasus Kecelakaan Kerja*. KPonline. https://www.koranperdjoeangan.com/catatan-k3-pln-2022-14-pekerja-tewas-dari-30-kasus-kecelakaan-kerja/

Qurbani D, S. U. (2018). Pengaruh Keselamatan & Kesehatan Kerja (K3) Terhadap Kinerja Karyawan pada PT. Trakindo Utama Cabang Bsd. *PT. Trakindo Utama Cabang Bsd*, *1*(1), 29–110.

Rajagukguk, A. S. F., Pakiding, I. M., Rumbayan, E. M., & Eng, M. (2023). Kajian Perencanaan Kebutuhan dan Pemenuhan Energi Listrik di Kota Manado. Ejournal. *Unsrat. Ac. Id*, *4*(3), 1–12. https://ejournal.unsrat.ac.id/index.php/elekdankom/article/view/7972

Ramli, M. (2022). Pengaruh kompetensi tenaga kerja terhadap keselamatan kerja. *Syntax Literate*, *7*(11), 17881.

Rivai, V. (2018). *Manajemen Sumber Daya Manusia untuk Perusahaan: dari Teori ke Praktik*. Raja Grafindo Persada.

Safitri, A., Mafulla, D., Nichlah, M. W., Roykhan, R. M., Devi, S., & Absor, U. (2024).

Analisis Identifikasi Risiko, Penilaian Risiko Dan Pengendalian Risiko Pada CV Sinar Jaya Mandiri. *Jurnal Ilmiah Keuangan Akuntansi Bisnis*, *3*(2), 513–518.

Sutrisno, E. (2010). *Manajemen Sumber Daya Manusia*. Kencana Prenada Media Group.

Sutrisno, E. (2019). *Kompetensi dan Pengembangan Tenaga Kerja*. Alfabeta.

Suwandy, S. D. (2020). Keselamatan dan kesehatan kerja serta pengaruhnya terhadap kinerja tenaga kerja. *Urnal Manajemen Produksi*, *12*(1), 63–76.

Wahyono, S. A. (2015). Analisis Pengaruh Pengendalian Internal dan Pengelolaan Risiko Terhadap Kinerja Perusahaan. *Jurnal Indonesia Membangun*, *14*(2), 1–17.