DIJEFA: Dinasti International Journal of Economics, Finance & Accounting
E-ISSN: 2721-303X
P-ISSN: 2721-3021
https://dinastipub.org/DIJEFA dinasti.info@gmail.com +62 811 7404 455

DOI: https://doi.org/10.38035/dijefa.v6i6.5674
https://creativecommons.org/licenses/by/4.0/
Received: 02 October 2025 | **Revised:** 02 December 2025 | **Accepted:** 15 December 2025

QRIS Adoption Intention for MSMEs in Indonesia: Integration of Technology Acceptance Model (TAM) and Theory of Planned Behavior (TPB) to Accelerate Digital Transformation

Siti Annisa Wahdiniawati[1*], Vely Randyantini[2], Ari Apriani[3], Ika Puji Saputri[4]
[1]Universitas Dian Nusantara, Jakarta, Indonesia, siti.annisa.wahdiniawati@undira.ac.id
[2]Universitas Dian Nusantara, Jakarta, Indonesia, vely.randyantini@undira.ac.id
[3]Universitas Dian Nusantara, Jakarta, Indonesia, ari.apriani@undira..ac.id
[4]Universitas Dian Nusantara, Jakarta, Indonesia, ari.apriani@undira..ac.id

[*]Corresponding Author: siti.annisa.wahdiniawati@undira.ac.id[1]

Abstract: The urgency of this research is to be carried out considering the low adoption of QRIS among MSMEs in Indonesia (only 46.4% of 65 million MSMEs), even though QRIS offers cost efficiency, market expansion, and transaction transparency. This low penetration has the potential to hamper the financial inclusion and competitiveness targets of MSMEs in the 2024 Digital Indonesia roadmap. The purpose of the study was to analyze the dominant factors of QRIS adoption intention through the integration of Technology Acceptance Model (TAM) and Theory of Planned Behavior (TPB), combining psychological variables (attitude), technological perception (perceived ease of use, perceived usefulness), social factors (subjective norm), and perceived behavioral control. The method used is mixed methods by distributing questionnaires to MSMEs that have not yet adopted QRIS in Greater Jakarta (PLS analysis) and in-depth interviews with 7 MSME actors to uncover structural (infrastructure, digital literacy) and cultural barriers (non-cash transaction resistance). The sample of this study is 140 business actors who have not used QRIS. The results of the interview concluded that perceived cost is an obstacle for MSME actors not to use QRIS, then it is lowered to a research variable and included in the research model. The findings of this study are that perceived ease of use and perceived usefulness have a positive and significant effect on attitude, perceived cost, attitude, perceived behavioral control have a positive and significant effect on intention to use, while subjective norms have no effect on intention to use. Furthermore, attitude can mediate the influence of perceived ease of use and perceived usefulness on intention to use.

Keywords: Intention to Use; MSMEs; Technology Acceptance Model (TAM); Theory of Planned Behavior (TPB); QRIS.

INTRODUCTION

Micro, Small, and Medium Enterprises (MSMEs) are the main pillars of the Indonesian economy, accounting for more than 60% of the national GDP and absorbing 97% of the

workforce (Anastasya, 2023). However, this great contribution has not been balanced by an equitable digital transformation, especially in the adoption of digital payment systems such as QRIS (Quick Response Code Indonesian Standard).

Digital transformation in Indonesia is further strengthened with the presence of the Quick Response Code Indonesian Standard (QRIS) as a payment innovation that encourages financial inclusion. In 2024, QRIS transactions will shoot up 226.54% on an annual basis, supported by 50.50 million users and 32.71 million merchants, of which 30.2 million are MSMEs (Natsir, 2024). This achievement was strengthened by the value of MSME transactions through QRIS which reached IDR 32.86 trillion, indicating significant technological adaptation. A similar phenomenon is reflected in members of the Indonesian Indigenous Entrepreneurs Association (HIPPI), where 60% have switched to digital transactions and 40% have used QRIS as the main method (Idris, 2024). However, in the midst of this exponential growth, the Ministry of Cooperatives and SMEs recorded 65 million MSMEs in Indonesia, meaning that only 46.4% have adopted QRIS (Indonesia.go.id, 2024). More than half of MSMEs are still surviving with conventional methods, indicating a gap between the potential and reality of adoption.

Inhibiting factors need to be studied considering that QRIS offers cost efficiency, market expansion, and transaction transparency. Although HIPPI reports the adoption of QRIS by 40% of its members, this figure is not optimal compared to the number of MSMEs that have not been touched by digitalization (Idris, 2024) Previous studies have shown that the adoption of technology in MSMEs is influenced by the perception of convenience, benefits, social norms, and behavioral control. However, the integration of theoretical models such as *the Technology Acceptance Model* (TAM) and *the Theory of Planned Behavior* (TPB) has not been widely applied to analyze the intention to adopt QRIS in Indonesia. TAM focuses on the perception of usability and ease of use, while TPB explores the influence of subjective norms, attitudes, and behavioral controls. The combination of these two theories can provide a holistic perspective to identify the psychological and technical determinants that influence MSME decisions.

Based on this phenomenon, this study formulates the problem to be studied, does perceived *ease of use, perceived usefulness, subjective norm, perceived behavioral control, and attitude* affect *the intention to adopt QRIS?* The urgency of this research is due to the reason that accelerating the digital transformation of MSMEs is a strategic pillar in the Digital Indonesia 2024 roadmap, so a deep understanding of technology adoption factors is crucial. The low penetration of QRIS in more than 50% of MSMEs has the potential to hinder the financial inclusion and competitiveness targets of micro-scale businesses.

Previous research on QRIS adoption has revealed a variety of factors with a fragmented theoretical approach. Previous research on *Technology Acceptance Model (TAM)*-based studies has proven that *perceived usefulness* and *perceived ease of use* have a significant effect on adoption attitudes and intentions, but ignore social factors such as subjective norms (Lolowang, Tasik, Gunawan, et al., 2024) Research based on *the Theory of Planned Behavior (TPB)* in the Eastern Indonesian Millennial Generation highlights the influence of attitudes, subjective norms, and behavior control, but does not integrate the technological perspective of TAM (Tatian et al., 2024) Another study added the variable of product knowledge, but limited it to internal factors without considering external support such as the role of the government (Sholihah & Nurhapsari, 2022)whereas other researchers found government support as the dominant factor in the adoption of digital payment systems (Fathi & Wandebori, 2024)

There are inconsistencies in findings related to subjective norms, such as previous researchers who stated that subjective norms are insignificant in the context of QRIS (Saripudin et al., 2023) while other researchers confirmed their influence through limited TAM-TPB integration (Yadi et al., 2023) Technological aspects such as system and infrastructure reliability were recommended by previous researchers to be further explored (Nurendra et al., 2025) while other researchers emphasized risk perception as a major inhibitor (Nurhapsari &

Sholihah, 2022) Other studies identify financial literacy and Previous research on the adoption of QRIS reveals a variety of factors with a fragmented theoretical approach. Previous research on *Technology Acceptance Model (TAM)*-based studies has proven that *perceived usefulness* and *perceived ease of use* have a significant effect on adoption attitudes and intentions, but ignore social factors such as subjective norms (Lolowang, Tasik, & Gunawan, 2024) Research based on *the Theory of Planned Behavior (TPB)* in the Eastern Indonesian Millennial Generation highlights the influence of attitudes, subjective norms, and behavior control, but does not integrate the technological perspective of TAM (Tatian et al., 2024) Another study added the variable of product knowledge, but limited it to internal factors without considering external support such as the role of the government (Sholihah & Nurhapsari, 2022)whereas other researchers found government support as the dominant factor in the adoption of digital payment systems (Fathi & Wandebori, 2024)

There are inconsistencies in findings related to subjective norms, such as previous researchers who stated that subjective norms are insignificant in the context of QRIS (Saripudin et al., 2023) while other researchers confirmed their influence through limited TAM-TPB integration (Yadi et al., 2023) Technological aspects such as system and infrastructure reliability were recommended by previous researchers to be further explored (Nurendra et al., 2025) while other researchers emphasized risk perception as a major inhibitor (Nurhapsari & Sholihah, 2022) Other studies identified financial literacy and behavioral control as determinants of adoption intention, but subjective norms were not significant (B. Usman et al., 2025)

Previous research in the context of young generations revealed a tendency to ignore the risks of digital transactions (Berlianawati et al., 2024)), while other researchers emphasized *perceived behavioral control* and security as key factors, not social influences. The novelty of this research lies in the integration of TAM and TPB theories to analyze the intention of adopting QRIS, combining psychological variables (*attitude*), technological perception (*perceived ease of use*, *perceived usefulness*), and social factors (*subjective norm*), as well as perceived *behavioral control*) in a single frame. In addition, this study was conducted to strengthen quantitative data (PLS) through *in-depth interviews* with MSME actors, in response to previous researchers' recommendations to explore technical barriers such as infrastructure and digital literacy (Nurendra et al., 2025) This approach fills a gap in the literature that previous researchers identified about the lack of exploration of field contextual factors (Mahendra et al., 2024) By combining theory and methods, the study not only validates the theoretical relationship between TAM-TPB, but also uncovers socio-technical complexities that hinder the adoption of QRIS, such as cultural resistance or inequality of internet access, thus providing policy recommendations that are more implementable than previous studies.

METHODS

This study uses a mixed-methods approach that integrates quantitative and qualitative methods to analyze the intention of QRIS adoption in MSMEs in Indonesia. The research design begins with the collection of quantitative data through surveys, followed by *in-depth interviews* to enrich the findings and reveal specific contexts in the field.

The target population is MSMEs in the Greater Jakarta area that have not adopted QRIS, selected by *purposive sampling* based on the following criteria: (a) active businesses with daily transactions, (b) not yet registered as QRIS merchants, and (c) owners/businesses have access to digital devices. The quantitative sample was determined based on which the number of indicators was multiplied by 5 to 10 (Hair et al., 2021)while the qualitative sample involved 7 MSME actors who were selected based on variations in business sectors (food, fashion, services) and digital literacy levels. The Greater Jakarta area was chosen because it is an urban area where they can access technology in terms of infrastructure, but have not yet adopted

QRIS. The number of samples in this study is determined based on the number of indicators multiplied by 5, where the indicators in this study are 28 and multiplied by 5, so the number of samples is 140 respondents / business actors.

Quantitative data was obtained through a closed questionnaire that measured five variables: *perceived ease of use*, *perceived usefulness*, *subjective norms*, *attitude*, and *perceived behavioral control*. The questionnaire instrument used a Likert scale of 1-5 (1=strongly disagree; 5=strongly agree), adapted from the TAM and TPB models with modification of the QRIS context. Instrument validation was carried out through a content validity test by two experts as well as a reliability test with Cronbach's Alpha (>0.7). Qualitative data was collected through semi-structured interviews with open-ended question guides, such as: *"What are the main barriers that you have not adopted QRIS?"* or *"What do your customers think when they can't make transactions through QRIS?"*.

Quantitative data were analyzed using *Partial Least* Square-Structural Equation Modeling (PLS-SEM) with SmartPLS 3 software to test the relationships between variables in the TAM-TPB integrative model. The analysis stages include: (a) convergent and discriminant validity tests, (b) reliability tests, (c) structural model evaluation (R^2, *path coefficients*), and (d) hypothesis tests with a significance *t-value* of >1.96 (α=5%). Qualitative data are analyzed thematically through a codification process *(open coding*, *axial coding*) to identify patterns of barriers such as infrastructure limitations, cultural resistance, or lack of technical support. The results of the interviews were verified through *member checking* with participants to ensure the accuracy of the interpretation (Ghozali & Latan, 2020)

Quantitative and qualitative findings are integrated to answer the research questions. For example, if PLS shows *perceived behavioral control* as the dominant factor, an in-depth interview explores the causes, such as a lack of technical training or a lack of incentives. This triangulation ensures a holistic understanding, where statistical data confirm theoretical relationships, while field narratives explain contextual complexity.

Internal validity is maintained through strict control in instrument preparation and sample selection. Researchers avoid bias by involving trained assistants in data collection and conducting normality and heteroscedasticity tests on quantitative data. Ethical aspects are considered through the submission of research objectives, confidentiality of respondents' identities, and informed *consent* before the interview.

The combination of PLS and in-depth interviews not only empirically validated the TAM-TPB integration, but also produced policy recommendations that are relevant to the real conditions of MSMEs. This approach answers criticisms of previous studies (Mahendra et al., 2024; Nurendra et al., 2025) about the need to explore socio-technical factors that are often overlooked in pure theoretical analysis.

This study follows a systematic framework in questionnaire preparation, data processing, and reporting. The first stage begins with compiling a questionnaire based on a literature review to design questions that measure variables related to QRIS adoption. Furthermore, the questionnaire was tested on a portion of the sample (for example: 30 MSMEs) to assess clarity and consistency. The trial data was analyzed through a reliability test (Cronbach's Alpha) to eliminate unreliable question items (*loading factor* <0.5 or Alpha <0.7) (Ghozali & Latan, 2020)

RESULTS AND DISCUSSION

In the qualitative stage, in-depth interviews were conducted with 7 respondents who were business actors who had not used QRIS. The purpose of this interview is to explore the obstacles faced by business actors in the field in adopting QRIS technology. The results of the interviews show that one of the main obstacles is the perception of costs, where almost all

respondents feel burdened with administrative costs calculated based on turnover, which reduces their portion of profits.

The results of this interview were then analyzed and used to identify factors that affect the intention of business actors in using QRIS, and the findings were derived into research variables. One of the variables that emerged was the perception of cost as the main inhibiting factor. These variables, along with other variables such as perceived benefits and ease of use, as well as the concept of SDGs form the basis for building a research model that will be further tested in the quantitative stage. This study then continued with a survey to test the influence of these variables on QRIS adoption intentions. By using *mixed methods*, this study can provide a more in-depth and valid insight into the obstacles that occur in the field and also test the influence of these factors quantitatively, providing a more comprehensive understanding of the adoption of QRIS by MSME actors.

During the research period, there were 201 respondents who answered the questionnaire that was distributed. However, after the data selection process was carried out, only 153 questionnaires could be used for further analysis. Of these, 13 questionnaires were considered invalid and could not be used because they did not meet the required criteria, such as incompleteness or answers that were not relevant to the questions asked. Thus, the data used in this study were 140 questionnaires that met the criteria of validity and reliability, which were then analyzed to obtain in-depth conclusions regarding the factors that affect the intention to adopt QRIS by MSME actors in the Greater Jakarta area.

The following is a descriptive table of respondents containing demographic data of respondents in this study. This table includes information about the type of business, length of business, number of employees, business location, store access, monthly turnover, age, last education, and previous experience using QRIS.

Tabel 1. Characteristics Respondent

No	Variable	Category	Frequency	Percentage (%)
1	Type of business	Retail	24	17,14%
		Service	21	15,00%
		Culinary	59	42,14%
		Foodstuffs	14	10,00%
		Fashion	15	10,71%
		Plastic	3	2,14%
		Household Supplies	3	2,14%
		Handcraft	1	0,71%
		Total	**140**	**100,00%**
2	Length of business	< 1 year	7	5,00%
		1 – 3 years	47	33,57%
		4 – 6 years	39	27,86%
		7 years or more	47	33,57%
		Total	**140**	**100,00%**
3	Number of Employees	1 - 5 persons	138	98,57%
		6-10 persons	1	0,71%

No	Variable	Category	Frequency	Percentage (%)
		11 - 20 persons	1	0,71%
		Total	**140**	**100,00%**
4	Business Location	Jakarta	90	64,29%
		Bogor	3	2,14%
		Tangerang	41	29,29%
		Depok	1	0,71%
		Bekasi	5	3,57%
		Total	**140**	**100,00%**
5	Store Access	Online	11	7,86%
		Offline	102	72,86%
		Online and Offline	27	19,29%
		Total	**140**	**100,00%**
6	Monthly Turnover	< Rp 10 million	99	70,71%
		Rp 10 - Rp 50 million	40	28,57%
		Rp 51 - 100 million	0	0,00%
		More than 100 million	1	0,71%
		Total	**140**	**100,00%**
7	Age of Business Owner	18 - 25 years old	29	20,71%
		26 - 35 years old	30	21,43%
		36 - 45 years old	42	30,00%
		46 years old and above	39	27,86%
		Total	**140**	**100,00%**
8	Last Education	Elementary Equivalents	20	14,29%
		Junior High School Equivalent	21	15,00%
		High School Equivalent	93	66,43%
		Diploma 3	1	0,71%
		Bechelor Degree	5	3,57%
		Total	**140**	**100,00%**
9	Experience Using QRIS	Ever	46	32,86%
		Never	94	67,14%
		Total	**140**	**100,00%**

Source: Data processed by the researcher

Based on the data of respondent characteristics in Table 1, descriptive explanations of each variable contained in this study:

1. Type of Business

The most common type of business among respondents is culinary, with a total of 59 respondents or 42.14% of the total respondents. Retail businesses were the second most common category with 24 respondents (17.14%). Service businesses accounted for 15% with 21 respondents, while businesses in the fields of foodstuffs, *fashion*, plastics, household appliances, and handcrafts were recorded with a lower percentage. Thus, the majority of business actors in this study come from the culinary sector, which suggests that QRIS may be more widely used in the sector, although there are still variations in the types of businesses involved.

2. Length of business
   Based on data on the length of business, most business actors have been operating for more than 1 year. The 1 - 3 year category recorded a total of 47 respondents (33.57%), followed by 7 years or more with the same number (47 respondents or 33.57%). In addition, 4-6 years were recorded as many as 39 respondents (27.86%), while businesses that operated for less than 1 year were only recorded 7 respondents (5.00%). This shows that the majority of business actors already have enough experience in running their businesses, which allows them to have a better understanding of digital payment technologies such as QRIS.
3. Number of Employees
   Based on the number of employees, the majority of respondents have a relatively small number of employees, with 1 - 5 people as many as 138 respondents (98.57%). Categories 6 - 10 people and 11 - 20 people were each recorded with 1 respondent (0.71%). These findings reflect the dominance of MSMEs in Indonesia which are generally managed with a limited workforce, which is likely to affect technology adoption decisions, including QRIS.
4. Business Location
   The most business locations are in Jakarta, with 90 respondents (64.29%), reflecting the large concentration of MSMEs in the capital city. Tangerang was in second place with 41 respondents (29.29%), while Bogor and Bekasi each recorded 3 respondents (2.14%), and Depok only had 1 respondent (0.71%). The location, which is spread across the Greater Jakarta area, shows the importance of QRIS in supporting transactions in various regions with different levels of economic progress.
5. Store Access
   Most of the respondents ran their businesses offline, with 102 respondents (72.86%). Meanwhile, 27 respondents (19.29%) manage online and offline stores, and only 11 respondents (7.86%) have online stores. These findings show that most MSMEs still rely on traditional business models with face-to-face transactions, although some have also started to adopt online business models, which can affect their intention to use digital payment systems such as QRIS.
6. Monthly Turnover
   The majority of respondents recorded a monthly turnover of less than IDR 10 million, with 99 respondents (70.71%) in this category. A total of 40 respondents (28.57%) had a turnover between IDR 10 million - IDR 50 million, and only 1 respondent (0.71%) recorded a turnover of more than IDR 100 million. None of the respondents recorded a turnover between Rp 51 million - 100 million. These findings show that the majority of business actors in this study are MSMEs with limited turnover, which may be more sensitive to additional costs, including administrative costs associated with the use of QRIS.
7. Age of Business Owner
   The majority of business owners are in the age range of 36 - 45 years, with a total of 42 respondents (30.00%), followed by 46 years and above which recorded 39 respondents (27.86%). Respondents aged 26 - 35 years accounted for 30 respondents (21.43%), while business owners aged 18 - 25 years were recorded as many as 29 respondents (20.71%).

This shows that MSME owners in Greater Jakarta have a fairly diverse age range, with most of them in the productive age group, which allows them to be more open to the adoption of new technologies.

8. Last Education
   Most of the respondents had the last level of education at high school equivalent, with a total of 93 respondents (66.43%). Elementary and junior high school education were recorded with 20 respondents (14.29%) and 21 respondents (15.00%) respectively. Only 5 respondents (3.57%) have a S1 education, and 1 respondent (0.71%) has a D3 education. This reflects that the majority of business actors in this study have a secondary education background, which may affect their understanding and readiness to adopt digital technology.
9. Experience Using QRIS
   A total of 94 respondents (67.14%) revealed that they had never used QRIS, while 46 respondents (32.86%) had previous experience using QRIS. These findings suggest that although QRIS is increasingly being introduced in Indonesia, its adoption is still limited among business actors, which may be due to cost, security, and technological awareness barriers.

The validity test of formative indicators shows that any change that occurs in one indicator in a construct can affect other indicators in that construct, either by changing it or removing it from the model being analyzed. In other words, the interdependence between indicators in the construct is important to consider, because changes in one of the indicators can have implications for the overall structure of the model.

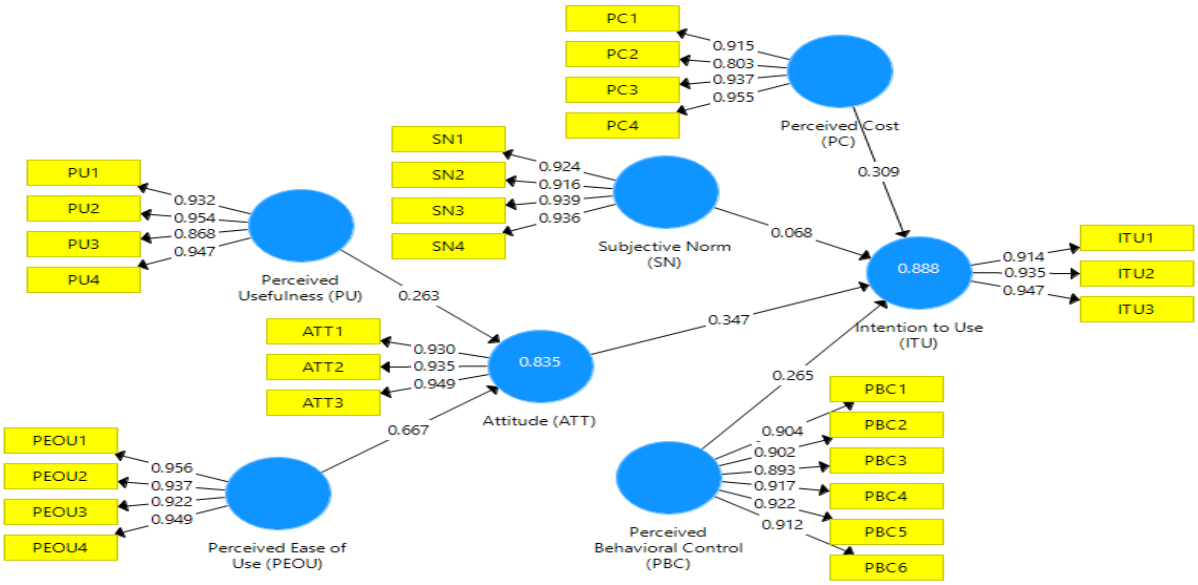

Figure 1. ***Measurement Model***
Source: Data processed by Researcher

In the hypothesis testing stage, the researcher assesses the relationship between variables in the research model based on the results of data processing that has been carried out. This test uses *t-statistical* values and *p-values* as the basis for making decisions about the acceptance or rejection of a hypothesis. The hypothesis is considered acceptable if the *p-value is* less than 0.05 and the direction of the relationship indicated by *the t-statistic* is in accordance with the hypothesis proposed, which is positive for the relationship that is predicted to be positive. Through this procedure, researchers can empirically evaluate whether the data support the

hypothesis that has been formulated. The results of the hypothesis test are presented to provide information on the significance and strength of influence between constructs, thus providing a clear picture of the interaction and relationship of variables in the research model.

Table 2. Direct Hypothesis Testing

	Original Sample (O)	T Statistics (|O/STDEV|)	P Values
Attitude (ATT) -> Intention to Use (ITU)	0.347	5.434	0.000
Perceived Behavioral Control (PBC) -> Intention to Use (ITU)	0.265	4.006	0.000
Perceived Cost (PC) -> Intention to Use (ITU)	0.309	4.667	0.000
Perceived Ease of Use (PEOU) -> Attitude (ATT)	0.667	7.153	0.000
Perceived Usefulness (PU) -> Attitude (ATT)	0.263	2.652	0.008
Subjective Norm (SN) -> Intention to Use (ITU)	0.068	1.280	0.201

Source: Data processed by researchers

Based on Table 2 of the hypothesis test results, it can be seen that most of the relationships between constructs in this research model are statistically significant. Construct *Attitude (ATT)* has a positive influence on *Intention to Use (ITU)* with a path coefficient of 0.347, *a t-statistical* value of 5.434, and *a p-value* of 0.000, which shows that the hypothesis regarding the influence of attitude on the intention to use QRIS is accepted. Similarly, *Perceived Behavioral Control (PBC)* on *Intention to Use (ITU)* showed a positive influence with a coefficient of 0.265, *t-statistic* 4.006, and *p-value* of 0.000, indicating a significant relationship.

The effect *of Perceived Cost (PC)* on *Intention to Use (ITU)* was also significant with a path coefficient of 0.309, *t-statistic* 4.667, and *p-value* of 0.000, which showed that cost perception also positively influenced the intention to use QRIS. Furthermore, *Perceived Ease of Use (PEOU)* had a strong influence on *Attitude (ATT)* with a coefficient of 0.667, *t-statistic* 7.153, and *p-value* of 0.000, showing that the ease of use of QRIS significantly shaped the positive attitude of respondents. *The Perceived Usefulness (PU)* to *Attitude (ATT)* was also shown to be significant with a coefficient of 0.263, *t-statistic* 2.652, and *a p-value* of 0.008, although the effect was more moderate than *that of PEOU.*

In contrast, the influence *of Subjective Norm (SN)* on *Intention to Use (ITU)* was not significant, with a path coefficient of 0.068, *t-statistic* 1.280, and *p-value* of 0.201, suggesting that social norms did not make a significant contribution to the intention to use QRIS in the context of this study. Overall, these results confirm that internal factors such as attitude, ease of use, cost perception, and benefit perception have a significant influence on the intention to use QRIS, while social factors tend to play less of a role in shaping adoption intentions among MSME actors.

Table 3. Indirect Hypothesis Testing

	Original Sample (O)	T Statistics (|O/STDEV|)	P Values
Perceived Ease of Use (PEOU) -> Attitude (ATT) -> Intention to Use (ITU)	0.232	4.226	0.000
Perceived Usefulness (PU) -> Attitude (ATT) -> Intention to Use (ITU)	0.091	2.317	0.021

Source: Data processed by Researcher

Based on Table 3 of the results of the mediation test, it can be seen that *Attitude (ATT)* plays a significant mediator in the relationship between *Perceived Ease of Use (PEOU)* and *Intention to Use (ITU).* The total path coefficient value of 0.232 with *a t-statistic* of 4.226 and *a p-value* of 0.000 shows that the ease of use of QRIS indirectly affects the intention of use through the formation of a significant positive attitude. This confirms that the perception of ease of use contributes to forming attitudes that further encourage the intention to adopt QRIS among MSME actors.

In addition, *Perceived Usefulness (PU)* also showed a significant mediating effect on *Intention to Use (ITU)* through *Attitude (ATT)*, with a path coefficient value of 0.091, *t-statistic* 2.317, and *p-value* of 0.021. Although this effect is more moderate than that of PEOU, these results show that the perception of the benefits of QRIS also forms a positive attitude, which then influences the intention to use QRIS. Overall, these findings affirm the importance of *Attitude*'s role as a mediator in bridging the influence of the perception of ease of use and the perception of benefits on the intention of adopting QRIS, so that the strategy of increasing adoption should emphasize on increasing the ease of use and benefits felt by MSME actors.

Perceived Ease of Use Has a Positive and Significant Effect on Attitude

Based on the results of the study, it can be concluded that *Perceived Ease of Use* (PEOU) has a positive and significant effect on *Attitude* (ATT), which means that the easier users feel in using QRIS, the more positive their attitude towards the use of this payment system is. This significant positive influence shows that the ease of use of QRIS plays an important role in shaping respondents' attitudes towards the technology. This is consistent with theories that the perception of ease of use of a technology will increase positive attitudes towards the technology, which in turn can encourage the intention to use it.

A positive attitude towards technology is often one of the main predictors of technology adoption, especially among small and medium enterprises (MSMEs). In this context, if QRIS is felt to be easy to use, then MSME actors will tend to have a more supportive attitude to the use of the system. On the other hand, if QRIS is considered difficult or complicated in its application, then negative attitudes or hesitation in adopting this technology are likely to arise.

These findings confirm the importance of ease of use in the digital technology adoption process. Therefore, the development of a user-friendly, easy-to-understand, and intuitive QRIS system is very important to increase the positive attitude of MSME actors, which will ultimately influence their decision to continue using QRIS in their business transactions.

This study is in line with a study in Vietnam showing that PEOU positively influences the intention to use electronic payments among individual and household retailers (Luu et al., 2021) Other researchers stated that perceived ease of use has a positive and significant effect on attitudes (Rahim et al., 2024; Sari et al., 2022; Sarkam et al., 2022). However, not all studies have found a significant direct effect of PEOU on attitude. Research on e-wallets in Java, Indonesia, shows that although PEOU has a positive impact on PU, PEOU does not have a significant direct effect on attitudes or intentions to use e-wallets (Ruslim et al., 2024) This suggests that the impact of PEOU on attitudes can vary depending on the specific context and other moderation factors.

Perceived Usefulness Has a Positive and Significant Effect on Attitude

Based on the results of the study, it was found that *Perceived Usefulness* (PU) has a positive and significant effect on *Attitude* (ATT), which shows that the greater the benefits felt by MSME actors in using QRIS, the more positive their attitude towards the use of the payment system is. This positive influence is in line with the *Technology Acceptance Model* (TAM) theory, which states that the perception of the usefulness of a technology will affect users' attitudes towards that technology. If MSME actors feel that QRIS provides significant benefits,

such as increasing transaction efficiency, reducing errors in payment recording, or providing convenience in the payment process, then they will be more likely to have a positive attitude towards using QRIS.

The perception of the usefulness or benefits of a technology is often the main factor that drives individuals to accept and adopt the technology. In the context of QRIS, if MSME actors feel that there are direct benefits, both in terms of operational convenience and in improving their business performance, they will be more supportive of using QRIS and feel more motivated to adopt it in the long term.

These findings confirm that *the Perceived Usefulness* aspect is very important in increasing positive attitudes towards the use of technology. Therefore, to increase the adoption of QRIS among MSME actors, it is important to emphasize the real benefits that can be obtained from using QRIS, such as cost efficiency, transaction speed, and convenience for both business actors and customers.

Various studies confirm that the perception of usability has a significant impact on users' attitudes towards digital payment systems. For example, the perception of usability has a positive impact on attitudes towards mobile payments among young professionals (Ariffin & Lim, 2022) digital banking among Gen Z (Julia et al., 2023) and digital payment systems in Vietnam (Nguyen, 2020) In the context of digital banking, usability perception is a strong predictor of positive attitudes, which in turn influences the intention to use these services (Julia et al., 2023; Louis et al., 2023; Nguyen, 2020)

Perceived Cost Has a Positive and Significant Effect on Intention to Use

Based on the results of the study, it was found that *Perceived Cost* (PC) had a positive and significant effect on *Intention to Use* (ITU), which showed that the lower the cost felt by MSME actors in using QRIS, the greater their intention to adopt and use the payment system. This significant positive influence indicates that perceptions of the costs associated with using QRIS, such as transaction fees or system maintenance costs, play an important role in shaping usage intent.

According to the *Technology Acceptance Model* (TAM) theory and various other technology adoption models, the perceived costs as part of the decision to adopt the technology have a significant impact on the intent to use. If MSME actors feel that the costs associated with using QRIS are quite affordable or even lower compared to other payment methods, then they will be more likely to have the intention to use QRIS. On the other hand, if the perceived cost is too high, this can hinder the intention of adopting the technology.

These findings confirm the importance of cost management in marketing strategies and technology implementation, especially in the context of QRIS. To increase the intention to use QRIS, service providers must focus on reducing costs associated with using QRIS for MSME actors, either through reducing transaction costs, offering incentives, or simplifying operational costs. This will increase the perception of positive value from the use of QRIS, which in turn will encourage wider adoption among MSMEs.

It is explicitly stated that the value of fees has a positive and significant effect on the intention to use digital banking (Adi et al., 2024) Components such as ease of transactions, minimal fees, and complete service features encourage individuals to use digital banking. Other researchers assert that perceived financial costs significantly and positively influence behavioral intentions to use mobile payment systems in Jordan (Lutfi et al., 2021) Other researchers also provided different results showing that the perception of cost negatively impacted the intention to use mobile payments in restaurants. This suggests that while cost can be a barrier in some contexts, cost can still play an important role in shaping user intent (Ting & Ahn, 2023)

Attitude Has a Positive and Significant Effect on Intention to Use

Based on the results of the study, *Attitude* (ATT) has a positive and significant effect on *Intention to Use* (ITU), which shows that a positive attitude towards the use of QRIS plays an important role in increasing the intention of MSME actors to adopt this payment system. This result is in line with the *Technology Acceptance Model* (TAM) theory which states that attitudes towards technology are the main predictors in determining the intention to use the technology. If MSME actors have a positive attitude towards QRIS, such as feeling that QRIS is easy to use, useful, and supports smooth transactions, then they will be more likely to have the intention to continue using the system.

This positive influence confirms that increasing positive attitudes towards QRIS can directly increase the intention to use among MSME actors. This shows that the strategy to promote QRIS should not only focus on its technical features and functionality, but also on efforts to form a positive attitude of MSME actors towards QRIS through effective education, training, and communication regarding the benefits of QRIS.

These findings underscore the importance of psychological aspects, particularly attitudes, in the technology adoption process. Therefore, interventions that aim to improve the perception and attitude of MSME actors towards QRIS can increase their intention to adopt and use QRIS more widely, which can ultimately support digital transformation in the MSME sector.

Various studies show that attitude has a significant effect on the intention to use QRIS. For example, a study found that attitudes, along with personal norms, had a positive and significant effect on the adoption of QRIS for alms in temples in Bali (Rahmayanti et al., 2025) Another study highlights that attitudes towards the use of QRIS are a significant predictor of behavioral intentions to use QRIS among MSMEs in Jakarta (O. Usman et al., 2025) Quantitative studies using Structural Equation Modeling (SEM) and Partial Least Squares (PLS) methods consistently show that attitude is a significant determinant of behavioral intention to use QRIS (Michael, 2024)

Subjective Norm Has No Effect On Intention To Use

Based on the results of the study, *the Subjective Norm* (SN) does not have a significant effect on *the Intention to Use* (ITU), which means that social norms or the influence of others in the lives of MSME actors do not directly affect their intention to use QRIS. Although theoretically *Subjective Norms* are often considered as a factor influencing technology use decisions, especially in the context of the *Theory of Planned Behavior* (TPB) model, the results of this study show that social norms do not have a significant contribution in shaping the intention to adopt QRIS among MSME actors.

These results can be understood by considering the characteristics of MSME actors who may be more influenced by more direct and practical factors, such as ease of use, perceived benefits, and costs incurred, rather than by the social influence of individuals or groups around them. In addition, there may be variability in the level of concern for social norms in various MSME groups, where some business actors prioritize decisions based on profits and operational efficiency rather than social pressures or norms in their environment.

These findings highlight the importance of not considering social norms as the dominant factor in the technology adoption process, especially QRIS, among MSMEs. This shows that QRIS's promotion and education strategy should emphasize more on the practical and technical benefits that can be obtained by MSME actors, such as ease of transactions, cost efficiency, and payment speed, rather than on social encouragement or external influences.

A study specifically found that subjective norms did not have a significant influence on intentions to use digital payments. The study used quantitative surveys and found that although financial literacy and perceptions of behavioral control significantly affected intentions, subjective norms did not show a clear influence (B. Usman et al., 2025) Another study focusing

on the adoption of QRIS among Generation Z in Jakarta also concluded that social influences (components of subjective norms) do not significantly affect behavioral intentions (Jannah et al., 2025)

However, there are studies that show that subjective norms do have a significant impact on the intention of using mobile payment systems. For example, a study conducted in Spain found that subjective norms significantly influence the intention to use mobile payments, especially when users have the opportunity to use the service and receive adequate information (Luna, 2024)

The influence of subjective norms can vary depending on the context and specific user groups. For example, in the context of QRIS adoption among MSMEs in Indonesia, social influences were found to have a positive impact on intentional behavior (Gui et al., 2023) This suggests that the influence of subjective norms can be context-dependent and can vary across different demographic groups and regions.

Perceived Behavioral Control Has a Positive and Significant Effect on Intention to Use

Based on the results of the study, *Perceived Behavioral Control* (PBC) has a positive and significant effect on *Intention to Use* (ITU), which shows that the greater the control felt by MSME actors over the use of QRIS, the higher their intention to adopt it. This significant positive influence supports the *Theory of Planned Behavior* (TPB) theory, which states that an individual's perception of their ability to control a particular behavior influences their intention to do so. In the context of using QRIS, MSME actors who feel they have full control over the decisions and use of this technology tend to be more committed to adopting it in their business transactions.

This perception of control can involve various factors, such as ease of accessing and using QRIS, the level of comfort with the technology, and confidence in dealing with potential technical issues or operational difficulties that may arise. When MSME actors feel that they can control and manage the use of QRIS without significant obstacles, they will be more likely to try to use it in a sustainable manner.

These results emphasize the importance of ensuring that MSME actors have the necessary sense of control and skills to use QRIS effectively. Therefore, adequate education, training, and technical support efforts must be provided to MSME actors so that they feel more confident and have full control over the use of QRIS. This will increase their intention to continue using the payment system in their daily business activities.

A study explicitly highlighted that perceived behavioral control significantly influences the intention to use digital payments. The study used quantitative surveys and found that perceived behavioral control, along with financial literacy, significantly influenced the intention to use digital payments (B. Usman et al., 2025) This shows that there is a direct positive relationship between the perception of behavioral control and the intention to use a digital payment system.

Although the perception of behavioral control is a significant factor, other studies emphasize additional factors such as the perception of ease of use, perception of usability, and trust, which also play an important role in shaping behavioral intentions toward the use of QRIS and other digital payment methods (Husin et al., 2023; Jannah et al., 2025; Michael et al., 2024; Nida & Alfirdaus, 2024; Persadha et al., 2024; Ruisli et al., 2024; Syafaastuti et al., 2024; Syanova & Fajar, 2024; O. Usman et al., 2025) These factors often work in tandem with perceived behavioral controls to influence user intent.

Attitude Can Mediate the Influence of Perceived Ease of Use on Intention to Use

Based on the results of the study, it was found that *Attitude* (ATT) plays a significant mediator role in the relationship between *Perceived Ease of Use* (PEOU) and *Intention to Use*

(ITU). In other words, the ease of use of QRIS felt by MSME actors indirectly affects their intention to use it through the formation of a positive attitude towards the technology. The path coefficient values that show the influence *of PEOU* on *Attitude*, as well as the influence of *Attitude* on *Intention to Use*, confirm that a positive attitude towards QRIS is a key factor in mediating the relationship between ease of use and intention to adopt this technology.

This mediation process is in line with the *Technology Acceptance Model* (TAM) theory, which states that the perception of the ease of use of a technology will form a positive attitude, which will then encourage individuals to intend to use the technology. When MSME players feel that QRIS is easy to use, they will develop a more positive attitude towards this technology, which in turn increases their intention to continue using it in their business activities.

These findings affirm the importance of building the perception of ease of use as the first step in influencing the attitudes of MSME actors. Therefore, QRIS development and promotion strategies should focus on increasing ease of use and reducing technical obstacles that may be felt by MSME actors. This will strengthen their positive attitude towards QRIS, which will then increase their intention to adopt it more widely.

The role of attitude mediation is supported by findings where perceived ease of use influences attitudes, which in turn influences intentions to use digital payment systems (Bakhitah et al., 2023; Husin et al., 2023; Julia et al., 2023; O. Usman et al., 2025) This mediation shows that ease of use indirectly affects the intention of use through the formation of positive attitudes.

Attitude Can Mediate the Influence of Perceived Usefulness on Intention to Use

Based on the results of the study, it was found that *Attitude* (ATT) plays a significant mediator role in the relationship between *Perceived Usefulness* (PU) and *Intention to Use* (ITU). In other words, the benefits felt from the use of QRIS affect the intention of use through the formation of a positive attitude towards the technology. These results confirm that perceptions regarding the usability of QRIS directly influence users' attitudes towards this technology, which in turn increases their intention to adopt QRIS in their business activities.

This phenomenon is consistent with *the Technology Acceptance Model* (TAM) theory, which states that the perception of the benefits or usefulness of a technology will affect an individual's attitude towards the technology, and this attitude is the main predictor of the intention to use. In the context of QRIS, if MSME actors feel that this technology provides significant benefits, such as increasing transaction efficiency and reducing operational costs, they will tend to develop a more positive attitude towards this technology, which ultimately drives their intention to continue using it.

These findings emphasize the importance of clarifying and communicating the real benefits that MSME actors can obtain from the use of QRIS, so that they can form a more positive attitude. Therefore, QRIS's marketing and education strategy should emphasize how this payment system can improve business efficiency and performance, which will strengthen positive attitudes and increase the intention to use technology among MSMEs.

Attitude acts as a mediator between the perception of usability and the intention to use the digital payment system. This mediating effect is crucial in understanding how the perception of usability translates into actual use intent (Chaveesuk et al., 2022; Husin et al., 2023; Syafaastuti et al., 2024) A study focusing on the adoption of digital payments in Indonesia found that the perception of usability indirectly influences the intention to use QRIS through attitudes (Syafaastuti et al., 2024) Similarly, other research confirms that attitudes mediate the relationship between usability perception and sustained intention to use digital payments (Chaveesuk et al., 2022)

CONCLUSION

Based on the results of a study that integrates Technology Acceptance Model (TAM) and Theory of Planned Behavior (TPB) to analyze the intention to adopt QRIS by MSMEs, the main findings show that factors such as perceived ease of use and perceived usefulness have a positive and significant effect on attitude, which in turn affects the intention to use QRIS. Perceived behavioral control was also shown to have a positive effect on the intention of use, while subjective norms did not show a significant effect. This indicates that social norms or influences from the surrounding environment, such as friends, family, or the business community, do not directly affect the decision of MSME actors to adopt QRIS technology. On the other hand, MSME actors are more influenced by internal factors such as ease of use, perceived benefits, and cost perception, rather than by external social pressures.

In addition, attitude acts as a mediator that connects perceived ease of use and perceived usefulness with intention to use, reinforcing the importance of developing a QRIS system that is easy to use and provides real benefits for its users. These findings also show that perceived cost has a positive effect on the intention to use QRIS, which means that the lower the cost felt by MSME actors, the higher their intention to adopt it.

The implication of these findings is that strategies to increase the adoption of QRIS among MSMEs need to place more emphasis on ease of use, perceived benefits, and reduction of cost perceptions that can hinder adoption intentions. In addition, increasing digital literacy and supporting infrastructure is also needed to provide greater control for MSME actors in using QRIS. Therefore, policies that can facilitate cost reduction and increase understanding of the benefits of QRIS will greatly support the acceleration of the digital transformation of MSMEs in Indonesia.

Acknowledgement

This research was funded by the Ministry of Higher Education, Science, and Technology of the Republic of Indonesia with Master Contract Number 120/C3/DT.05.00/PM/2025 and Derivative Contract Number 0971/LL3/AL.04/2025; 11/084/H-SPKH/VI/2025.

REFERENCES

Adi, M. P. H., Chandra, A., Winoto, A., & Kartikasary, M. (2024). Determining Factors of the Intention to Use Digital Banking. *2024 9th International Conference on Business and Industrial Research (ICBIR)*. https://doi.org/10.1109/ICBIR61386.2024.10875979

Anastasya, A. (2023). *Data UMKM, Jumlah dan Pertumbuhan Usaha Mikro, Kecil, dan Menengah di Indonesia*. Https://Ukmindonesia.Id/. https://ukmindonesia.id/baca-deskripsi-posts/data-umkm-jumlah-dan-pertumbuhan-usaha-mikro-kecil-dan-menengah-di-indonesia

Ariffin, S. K., & Lim, K. T. (2022). The influence of consumer trust in consumer behaviour toward mobile payment applications amongst young professionals. *International Journal of Technology Marketing*, *16*(1–2), 5–26.

Bakhitah, A., Indra, R., Halim, W., Ferbian, V., & Hidayat, Z. (2023). QRIS as a drivers of product distribution flows in Indonesia: factors of consumer purchasing behavior in the use of fintech payments. *Journal of Distribution Science*, *21*(12), 59–69. https://doi.org/10.15722/jds.21.12.202312.59

Berlianawati, D. I., Nurabiah, & Ridhawati, R. (2024). Exploring The Mind of Gen Z: Deciphering E-wallet Adoption Through The Lens of TPB Theory. *Jurnal Ilmiah Akuntansi Dan Bisnis*, *19*(1). https://doi.org/10.24843/JIAB.2024.v19.i01.p09

Chaveesuk, S., Khalid, B., & Chaiyasoonthorn, W. (2022). Continuance intention to use digital payments in mitigating the spread of COVID-19 virus. *International Journal of Data & Network Science*, *6*(2).

Fathi, K. A., & Wandebori, H. (2024). Investigation Of Behavioral Intention To Use Digital Payment System In Indonesia From Merchant And Consumer Perspective (Case Study: QRIS). *E-Jurnal Apresiasi Ekonomi*, *12*(2), 309–325.

Ghozali, I., & Latan, H. (2020). *Partial Least Squares: Konsep, Teknik dan Aplikasi Menggunakan SmartPLS 3.0 Untuk Penelitian Empiris (Vol. 2)*. Universitas Diponegoro.

Gui, A., Nelly, N., Ganesan, Y., Kristalin, D. B., Mayada, A. Z., & Rahmi, A. (2023). Influential Factors Affecting the Adoption of Quick Response Code in Indonesian Standard for Digital Payments. *2023 IEEE 8th International Conference on Recent Advances and Innovations in Engineering (ICRAIE) (*, 1–5.

Hair, J. J. F., Hult, G. T. M., Ringle, C. M., & Sarstedt, M. (2021). *A primer on partial least squares structural equation modeling (PLS-SEM)*. Sage Publications.

Husin, J., Cordelia, S., & Vivaldi. (2023). Analysis of Factors Influencing The Use of QRIS Through Mobile Banking in Jakarta and Tangerang. *6th International Conference on Information Systems and Computer Networks (ISCON)*. https://doi.org/10.1109/ISCON57294.2023.10111978

Idris, M. (2024). *Masih Banyak Pelaku Usaha Belum Menggunakan QRIS, Apa Kendalanya?* Kompas.Com. https://money.kompas.com/read/2024/07/24/140053026/masih-banyak-pelaku-usaha-belum-menggunakan-qris-apa-kendalanya?page=all

Indonesia.go.id. (2024). *UMKM Indonesia Makin Kuat: Program Level Up 2024 Siap Dorong Digitalisasi Bisnis*. Indonesia.Go.Id. https://indonesia.go.id/kategori/editorial/8587/umkm-indonesia-makin-kuat-program-level-up-2024-siap-dorong-digitalisasi-bisnis?lang=1

Jannah, D. M., Nurrahma, P. N., & Leonita, L. (2025). Digital Payment: The Antecedents of QRIS Usage among Gen Z. *2025 5th International Conference on Innovative Research in Applied Science, Engineering and Technology (IRASET)*.

Julia, L., Linggam, P. S., Hibatullah, R., & Justianto, J. S. (2023). The impact of perceived risk and technology acceptance model on gen z's adoption of digital banking. *WSEAS Transactions on Computer Research*, *12*, 1–18.

Lolowang, T., Tasik, H. H. ., & Gunawan, E. M. (2024). Unlocking The QRIS Impact: An Analysis Of Mobile Payment Among Msmes Using Technology Acceptance Model (TAM). *Jurnal EMBA*, *9*(2), 793–803.

Lolowang, T., Tasik, H. H. D., Gunawan, E. M., & Program, M. (2024). Unlocking The QRIS Impact: An Analysis of Mobile Payment Among Msmes Using Technology Acceptance Model (TAM). *Jurnal EMBA: Jurnal Riset Ekonomi, Manajemen, Bisnis Dan Akuntansi*, *12*(4), 793–803.

Louis, E. N., Sartono, E. S., Patricia, E., Gui, A., Shaharudin, M. S., Pitchay, A. A., & Chanda, R. C. (2023). Factors Influencing Customers Intention to Use Digital Banking Services. *2023 IEEE Symposium on Industrial Electronics and Applications, ISIEA 2023*.

Luna, I. R. de. (2024). Consumer Behaviour and Mobile Payments in the Point of Sale: Exploring the Determinants of Intention to Adopt It. *International Journal of Human-Computer Interaction*, *40*(18), 5350–5372. https://doi.org/10.1080/10447318.2023.2233135

Lutfi, A., Al-Okaily, M., Alshirah, M. H., Alshira'h, A. F., & ... (2021). Digital financial inclusion sustainability in Jordanian context. *Sustainability*, *13*(11), 6312. https://www.mdpi.com/2071-1050/13/11/6312

Luu, T. M. N., Nguyen, P. M., Ho, N.-N.-Y., & Phung, D. T. (2021). Antecedents of the intention to use electronic payment: evidence from individual and household retailers in Vietnam. *International Journal of Electronic Business*, *16*(3), 296–313. https://doi.org/10.1504/IJEB.2021.116613

Mahendra, R. A., Eviyani, E. R., Putri, I. M., Safitri, D., & Budiman, J. (2024). Pengaruh

Perceived Security, Perceived Behavioural Control, Dan Social Influence Terhadap Behavioural Intention Indonesian Standard Quick Response (QRIS) Pada Gen - Z Di Kota Batam. *Economos :Jurnal Ekonomi Dan Bisnis*, *7*(1).

Michael, G. (2024). Analysis of Factors Affecting Behavioral Intention to Use QRIS. In *2nd International Conference on Emerging Trends in Information Technology and Engineering, ic-ETITE 2024*. https://doi.org/10.1109/ic-ETITE58242.2024.10493415

Michael, G., Widjaya, W., & Gui, A. (2024). Analysis of Factors Affecting Behavioral Intention to Use QRIS. *2024 Second International Conference on Emerging Trends in Information Technology and Engineering (ICETITE)*, 1–6.

Natsir, M. (2024). *Transaksi QRIS Tumbuh 226,54 Persen, Masih Didominasi UMKM*. Https://Emitennews.Com/. https://emitennews.com/news/transaksi-qris-tumbuh-22654-persen-masih-didominasi-umkm

Nguyen, O. T. (2020). Factors affecting the intention to use digital banking in Vietnam. *Journal of Asian Finance, Economics and Business*, *7*(3), 303–310.

Nida, R., & Alfirdaus, Z. (2024). Driving Economic Growth via QRIS Adoption in Indonesia with Trust Moderating Variable. *2024 3rd International Conference on Creative Communication and Innovative Technology (ICCIT)*, 1–6.

Nurendra, M. Z., Wijaya, L. I., Ardiansyahmiraja, B., & Kajee, J. (2025). Factors Influencing QRIS Adoption In Warkops. *Jurnal Aplikasi Bisnis Dan Manajemen (JABM)*, *11*(1). https://doi.org/http://dx.doi.org/10.17358/jabm.11.1.214

Nurhapsari, R., & Sholihah, E. (2022). Analysis of the factors of intention to use QRIS for MSMEs in Semarang City's traditional market. *Jurnal Ekonomi Modernisasi*, *18*(2), 199–211.

Persadha, P. D., Lukito, D., Wahyuni, E. S., Judijanto, L., Bakri, A., Paranita, E. S., & Susanti, M. (2024). Factors Influencing Consumer Adoption of QRIS Mobile Payment Services in Indonesia : An Extended Technology Acceptance Model Approach. *Journal of Logistics, Informatics and Service Science*, *11*(7), 1–17. https://doi.org/10.33168/JLISS.2024.0701

Rahim, H., Irpan, H. M., Zakaria, N. B., Fairooz, M., Khir, A., & Ahammad, S. F. (2024). PERCEIVED USEFULNESS AND ATTITUDE TOWARD INTENTION AND ACCEPTANCE OF E-PAYMENT ZAKAT. *Journal of Nusantara Studies*, *9*(1), 320–344. https://doi.org/https://doi.org/10.24200/jonus.vol9iss1pp320-344

Rahmayanti, P. L. D., Giantari, I. G. A. K., Ekawati, N. W., & Setiawan, P. Y. (2025). Digital financial transformation in religious traditions: Analyzing Qris usage intentions for dana Punia in Bali. *Edelweiss Applied Science and Technology*, *9*(6), 345–362.

Ruisli, M., Hardini, M., Sanjaya, Y. P. A., Padeli, & Agustian, H. (2024). Exploring key factors driving qr payment adoption in digital banking in indonesia. *2024 12th International Conference on Cyber and IT Service Management (CITSM)*, 1–5.

Ruslim, T. S., Herwindiati, D. E., & Cokki. (2024). Adoption of e-wallet in the post-pandemic era: A study on Generation X's intention to use e-wallet. *Innovative Marketing*, *20*(2), 267–280. https://doi.org/10.21511/im.20(2).2024.22

Sari, R. L., Habibi, A. B., & Hayuningputri, E. P. (2022). Impact of Attitude, Perceived Ease of Use, Convenience, and Social Benefit on Intention to Use Mobile Payment. *Asia Pacific Management and Business Application*, *011*(02), 143–156. https://doi.org/10.21776/ub.apmba.2022.011.02.2

Saripudin, Yuniarti, R., & Ernawati, D. (2023). Exploring the Factors Influencing the Adoption of QRIS as a Digital Payment in Indonesia. *The Journal of Management Theory and Practice (JMTP)*, *4*(1). https://doi.org/http://dx.doi.org/10.37231/jmtp.2023.4.1.322

Sarkam, N. A., Mohamad Razi, N. F., Mohammad, N. H., Jamil, N. I., & Kurniawati, L. (2022). Attitudes, Security, and Perceived Ease of Use Influence The Consumers' Decision to

Use An E-payment System. *International Journal of Academic Research in Business and Social Sciences*, *12*(3), 357–368. https://doi.org/10.6007/ijarbss/v12-i3/12884

Sholihah, E., & Nurhapsari, R. (2022). Determinants of QRIS Adoption Intention for MSMEs:Identification During Covid-19. *The 1stProceeding of The International Conference on Economics AndBusiness*, 320–329.

Syafaastuti, S., Delfina, Y., & Syahchari, D. H. (2024). The Use of the Technology Acceptance Model (TAM) to Analyze the Effects of Social Influence on the Interest in Implementing Cashless Payment (QRIS). *2024 7th International Conference of Computer and Informatics Engineering (IC2IE)*, 1–6.

Syanova, R., & Fajar, A. N. (2024). Analysis of Factors That Influence Use Behaviour of Using Qris Payments for Umkm in Bekasi. *Journal of Logistics, Informatics and Service Science*, *11*(7), 324–341.

Tatian, C. T., Nurabiah, Ridhawati, R., & Thao, H. T. P. (2024). From wallets to screens: Exploring the determinants of QRIS payment adoption among Millennials in Eastern Indonesia. *JEMA: Jurnal Ilmiah Bidang Akuntansi Dan Manajemen*, *21*(1), 87–113. https://doi.org/http://dx.doi.org/10.31106/jema.v21i1.21712

Ting, L., & Ahn, J. (2023). Customers' intentions to use mobile payment service: A comparative study of payment system types. *Total Quality Management & Business Excellence*, *34*(15–16), 2183–2200. https://doi.org/https://doi.org/10.1080/14783363.2023.2244888

Usman, B., Rianto, H., & Aujirapongpan, S. (2025). Digital payment adoption: A revisit on the theory of planned behavior among the young generation. *International Journal of Information Management Data Insights*, *5*(1), 100319. https://doi.org/https://doi.org/10.1016/j.jjimei.2025.100319

Usman, O., Hardini, I. R., & Kasofi, A. (2025). Integrated QR payment system: Cashless payment solution in developing countries from the perspective of MSMEs. *International Journal of Innovative Research and Scientific Studies*, *8*(2), 1424–1432. https://doi.org/10.53894/ijirss.v8i2.5470

Yadi, A. P., Hartanto, A. D., Ayatillah, M. S., & Wicaksono, F. N. (2023). Transformasi Kewirausahaan dalam Era QRIS: Dinamika dan Solusi Sistem Pembayaran Nirkontan dari Perspektif Pedagang. *Jurnal Informatika Ekonomi Bisnis*, *5*(4), 1172–1179.